PART NUMBER	DESCRIPTION	DIM. A
5220-3	5" X 2" X 1-3/16"	1.178 - 1.195

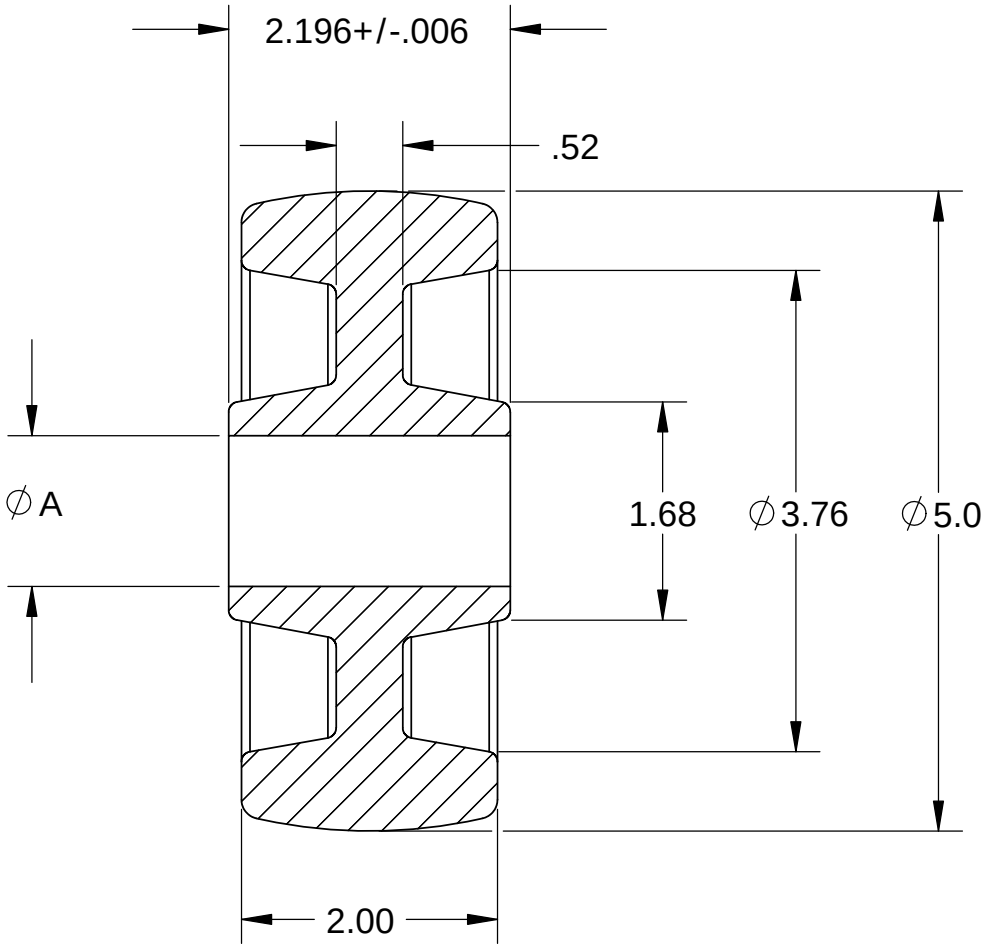

SECTION A-A
SCALE 1 : 1.5

UNLESS OTHERWISE SPECIFIED:		NAME	DATE
DIMENSIONS ARE IN INCHES TOLERANCES: ONE PLACE DECIMAIL ±0.060 TWO PLACE DECIMAL ±0.030 THREE PLACE DECIMAL ±0.015	DRAWN	JCH	2-10-09
	CHECKED	MM	2-11-09
	ENG APPR.	JCH	2-11-09
	MFG APPR.	BR	2-11-09
	Q.A.	MM	2-11-09
MATERIAL COPOLYMER POLYPROPYLENE	COMMENTS:		
DO NOT SCALE DRAWING			

PROPRIETARY AND CONFIDENTIAL
THE INFORMATION CONTAINED IN THIS DRAWING IS THE SOLE PROPERTY OF THE LAKONE COMPANY. ANY REPRODUCTION IN PART OR AS A WHOLE WITHOUT THE WRITTEN PERMISSION OF THE LAKONE COMPANY IS PROHIBITED.

CIRCULAR CONCEPTS
1003 AUCUTT ROAD, MONTGOMERY, IL 60134
TELEPHONE = 800-221-0069

TITLE:
5" X 2"

SIZE	DWG. NO.	REV
A	5220	A

SCALE: 1:1 | SHEET 2 OF 2

5 4 3 2 1